Absolute encoders - BiSS C

Cone shaft

Optical singleturn encoders

EFL580 - BiSS C

EFL580 with cone shaft

Features

- **Encoder singleturn / BiSS C**
- **Optical sensing method**
- **Resolution: singleturn 13 bit**
- **Additional incremental signals 2048 sine periods**
- **Cone shaft**
- **Operating temperature max. +105 °C**

Optional

- **Resolution 19 bit (for digital speed feedback)**
- **Alternative connectivity**

Technical data - electrical ratings

Voltage supply	5 VDC ±10 % (please consider the voltage drop on the supply cable)
Reverse polarity protection	Yes
Consumption w/o load	≤50 mA
Interfaces	BiSS C, SinCos
Function	Singleturn
Steps per revolution	8192 / 13 bit
Sensing method	Optical
Code	Binary
Incremental output	2048 sinewaves A, B, sine 1 Vpp
Interference immunity	DIN EN 61000-6-2
Emitted interference	DIN EN 61000-6-4
Approval	UL approval / E63076

Technical data - mechanical design

Size (flange)	ø58 mm
Shaft type	ø9.25 mm cone shaft (1:10)
Protection DIN EN 60529	IP 64
Operating speed	≤6000 rpm (electric)
Rotor moment of inertia	20 gcm²
Materials	Housing: aluminium Flange: aluminium
Operating temperature	-25...+105 °C
Relative humidity	95 % non-condensing
Resistance	DIN EN 60068-2-6 Vibration 30 g, 16-2000 Hz DIN EN 60068-2-27 Shock 200 g, 3 ms
Weight approx.	620 g (5 m cable), 940 g (Option: 10 m cable)
Connection	Cable 5 m with D-SUB, 15-pin Option: cable 10 m

· Subject to modification in technic and design. Errors and omissions excepted.

EFL580 - BiSS C

Part number

EFL580-C	R	K	.	D	J	6B	.	13	009

Resolution
13 13 bit singleturn

Voltage supply / interface
6B 5 VDC, BiSS C, binary

Connection
J Cable 5 m, tangential, SUB-D, 15-pin, 2 row

Protection
D IP 64

Mounting
K ø9.25 mm cone shaft, center screw

Flange
R With stator coupling ø72 mm

Terminal assignment

Connector	Assignment
Pin 1	A
Pin 2	GND
Pin 3	B
Pin 4	UB
Pin 5	Data+
Pin 6	–
Pin 7	–
Pin 8	Clock+
Pin 9	A inv.
Pin 10	GND-Sense
Pin 11	B inv.
Pin 12	UB-Sense
Pin 13	Data-
Pin 14	–
Pin 15	Clock-

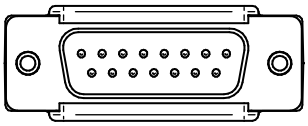

Trigger level

BiSS C	Circuit
BiSS C-Clock	RS422 Terminating resistor 220 Ω
BiSS C-Data	RS422

Outputs	Sine / Cosine
Output level	0.5 Vpp ±10 % (Output signals before difference formation)
Load	<10 mA

· Subject to modification in technic and design. Errors and omissions excepted. ·

EFL580 - BiSS C

Dimensions

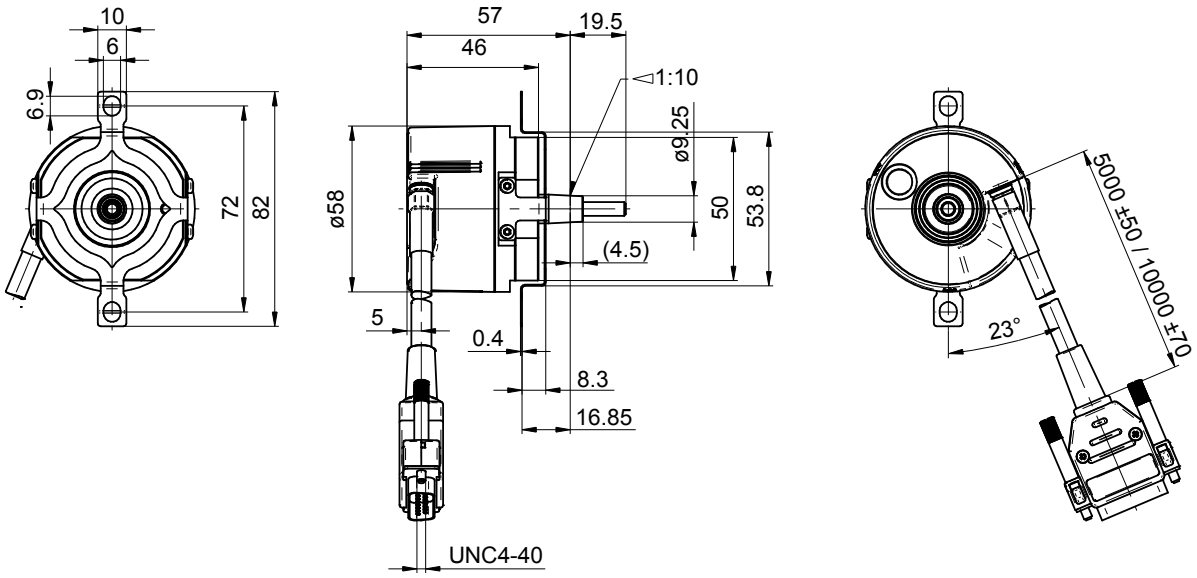

· Subject to modification in technic and design. Errors and omissions excepted.