Accessories
Mounting accessories

Mounting kit 003

Features

- **For low-dynamic applications and constant movements**

Description

Torque support onto encoder by help of the attached screws. Push encoder onto the drive shaft and mount torque support onto the client side. Fastening clamping ring by the screw provided.

Part number

11066081	Torque arm, 1-arm, bolt circle ø82 mm, mounting M4 (mounting kit 003)

Scope of delivery

Included:
torque support, two screws M3 x 12 (DIN 7985 - TX10) with two spacers 6 mm

Suitable for

EIL580 - blind hollow shaft, EIL580 - through hollow shaft, EIL580P - blind hollow shaft, EIL580P - through hollow shaft

Dimensions

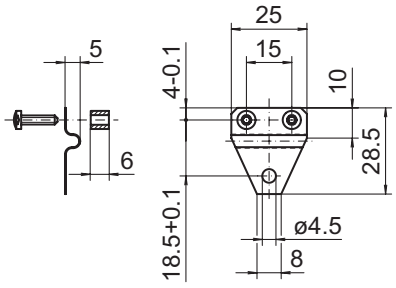

Z00396

Assembly drawing

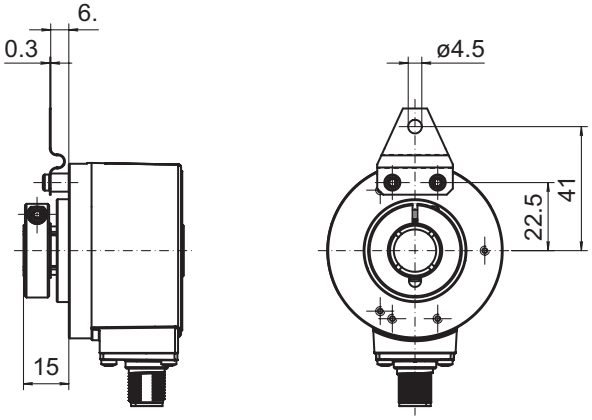

Subject to modification in technic and design. Errors and omissions excepted.