SPK-CAN

Signal phone for CAN communication panel

IP23 | -25~+50℃ | SPK | 85dB | RoHS COMPLIANT

SPK-CAN

SPK-CAN Signal phone for CAN communication panel

- Panel type signal phone that outputs clear and cheerful 8-48Khz MP3 Audio harmony by applying industrial CAN communication
- Up to 255ea of frame IDs can be set by software manager
- Can select and play 255 songs using CAN communication
- Save MP3 sound source using USB2.0 Micro Type B cable
- Supports 128Mbyte storage capacity (File format: FAT)
- Support CAN communication standard version 2.0A
- Supports 4 communication speeds: 125Kbps, 250Kbps, 500Kbps, 1Mbps
- Certificates : CE
- Material: ABS
- Volume: Max. 85dB at 1m
- Ambient temperature: -25℃-+50℃
- Protection class: IP23

Model number	Sound Type	dB	Voltage/ Current	Certificate	Weight
SPK-CAN	MP3 File (255 Sounds) CAN protocol	Max 85dB (Based on 1KHz)	DC12-24V/0.600A	CE	0.19kg

※ DC type model has a free-voltage range of DC10V-36V.

Terminal box for Signal phone for CAN communication panel (back side)

Technical Diagram

(Units : mm)

SPK-CAN

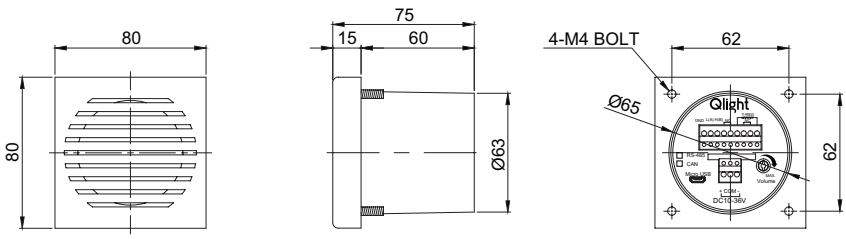

Wiring Instructions

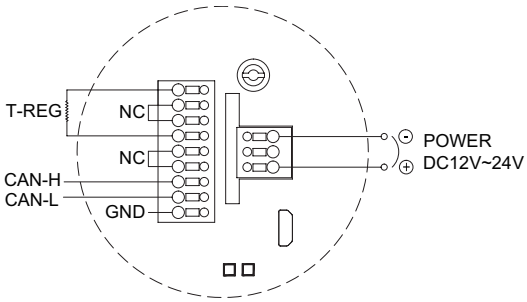

Ordering Specification

SPK-CAN	-	12/24
[Model number]		[Voltage]
• SPK-CAN		• 12/24-DC12V-24V